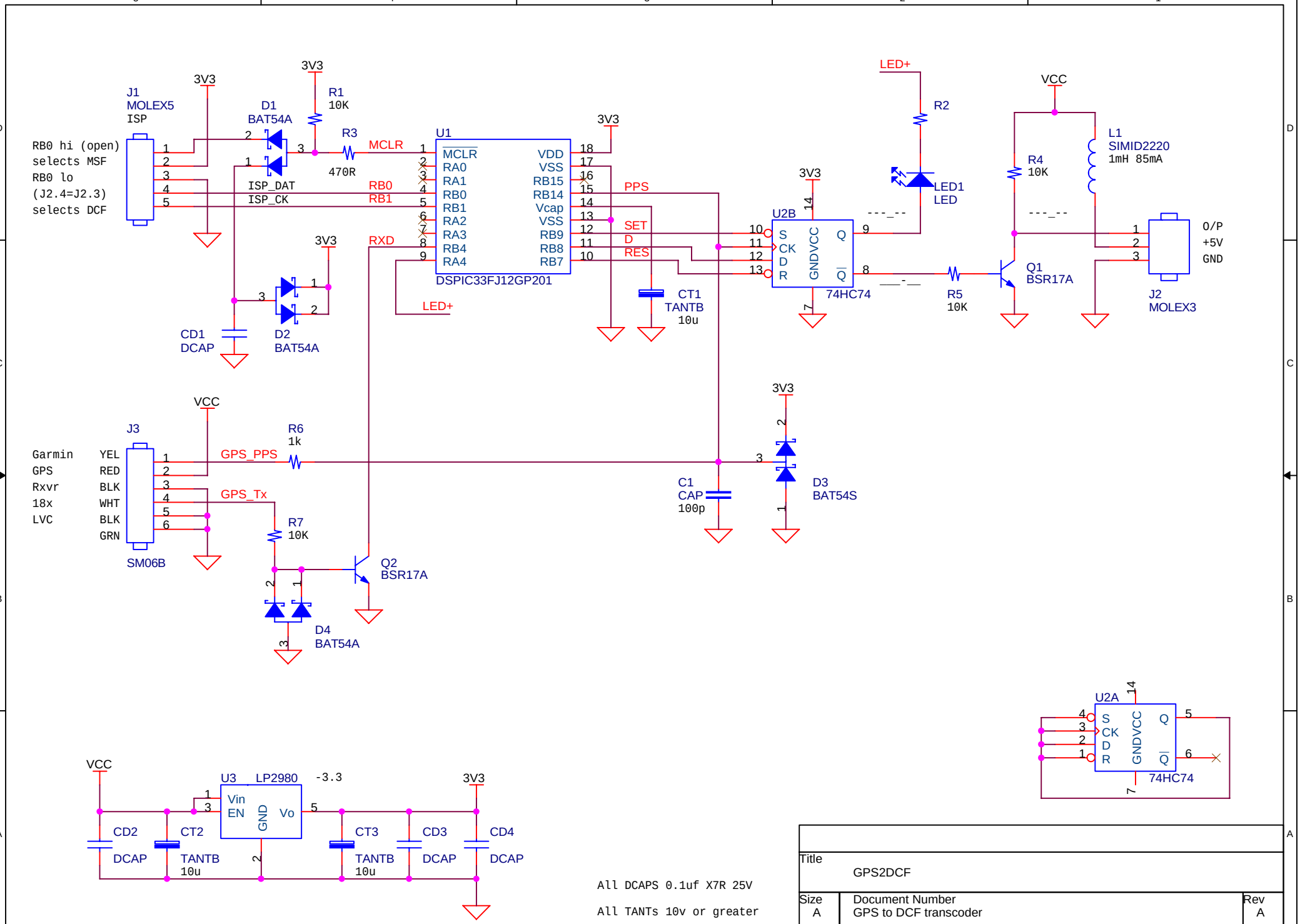
J1
MOLEX5
ISP
RB0 hi (open)
selects MSF
RB0 lo
(J2.4=J2.3)
selects DCF
3V3
D1
BAT54A
R1
10K
R3
470R
MCLR
ISP_DAT
ISP_CK
RB0
RB1
RXD
LED+
CD1
DCAP
D2
BAT54A
U1
MCLR
RA0
RA1
RB0
RB1
RA2
RA3
RB4
RA4
VDD
VSS
RB15
RB14
Vcap
VSS
RB9
RB8
RB7
DSPIC33FJ12GP201
PPS
SET
D
RES
CT1
TANTB
10u
U2B
S
CK
D
R
GNDVCC
Q
Q̄
74HC74
R2
LED1
LED
R4
10K
R5
10K
Q1
BSR17A
VCC
L1
SIMID2220
1mH 85mA
O/P
+5V
GND
J2
MOLEX3
J3
Garmin
GPS
Rxvr
18x
LVC
YEL
RED
BLK
WHT
BLK
GRN
SM06B
GPS_PPS
GPS_Tx
R6
1k
R7
10K
Q2
BSR17A
D4
BAT54A
C1
CAP
100p
D3
BAT54S
U2A
74HC74
U3
LP2980
-3.3
Vin
EN
GND
Vo
CD2
DCAP
CT2
TANTB
10u
CT3
TANTB
10u
CD3
DCAP
CD4
DCAP
All DCAPS 0.1uf X7R 25V
All TANTs 10v or greater
Title
GPS2DCF
Size
A
Document Number
GPS to DCF transcoder
Rev
A
Date:
Saturday, March 26, 2011
Sheet
1
of
1